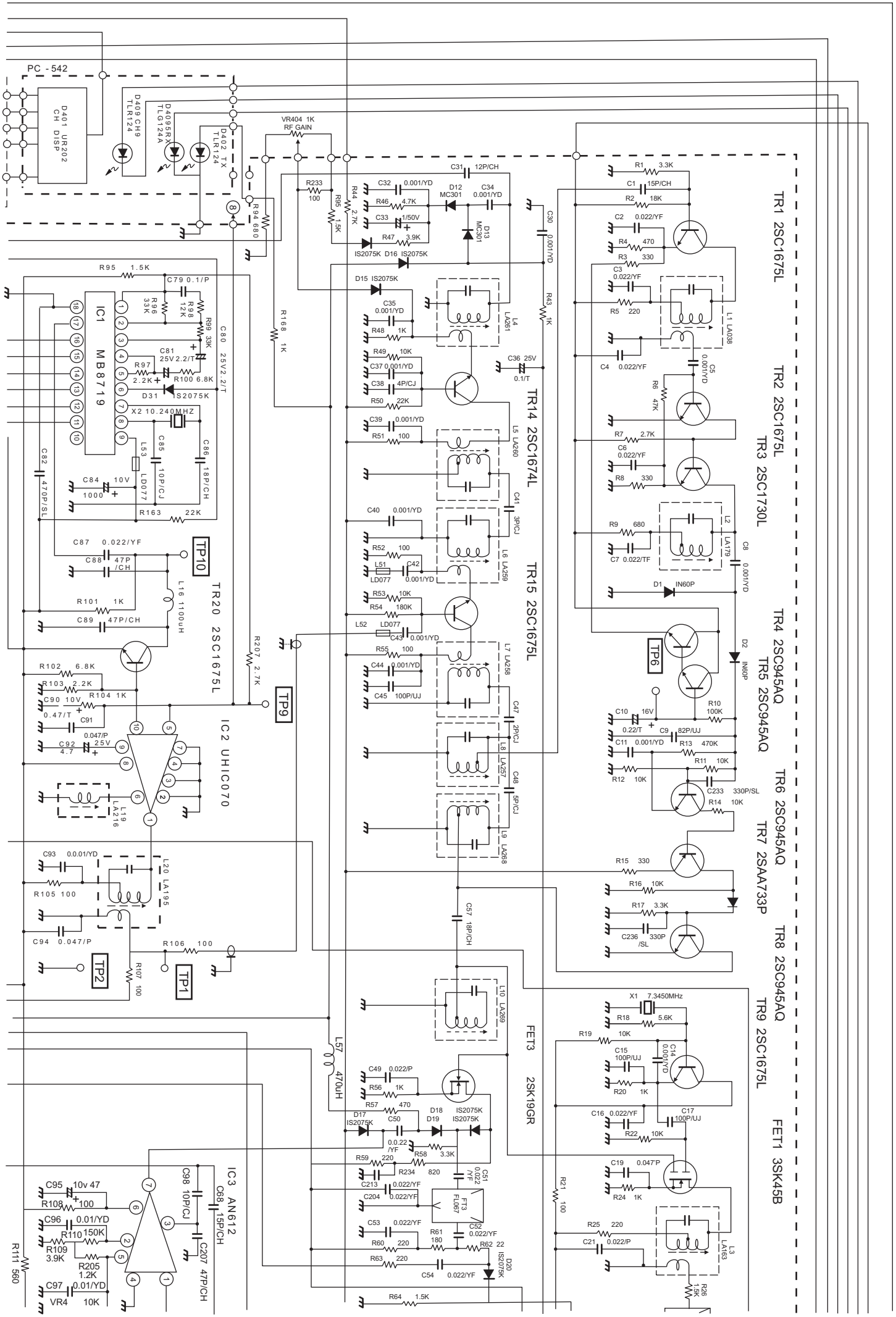
PC - 542
D401 UR202 CH DISP
D409 CH9 TLR124
D405 RX TLG124A
D402 TX TLR124
VR404 1K RF GAIN
R233 100
R95 1.5K
R44 2.7K
R94 680
R168 1K
R207 2.7K
R43 1K
C30 0.001/YD
C31 12P/CH
C32 0.001/YD
R46 4.7K
C33 1/50V
R47 3.9K
D12 MC301
C34 0.001/YD
D13 MC301
IS2075K D16 IS2075K
D15 IS2075K
C35 0.001/YD
R48 1K
R49 10K
C37 0.001/YD
C38 4P/CJ
R50 22K
C36 25V 0.1/T
C39 0.001/YD
R51 100
C40 0.001/YD
R52 100
L51 LD077
C42 0.001/YD
R53 10K
R54 180K
L52 LD077
C43 0.001/YD
R55 100
C44 0.001/YD
C45 100P/UJ
C41 3P/CJ
C47 2P/CJ
C48 5P/CJ
L4 LA261
L5 LA260
L6 LA259
L7 LA258
L8 LA257
L9 LA256
TR14 2SC1674L
TR15 2SC1675L
IC1 MB8719
R95 1.5K
C79 0.1/P
R96 33K
R98 12K
R99 33K
C80 25V2.2/T
C81 25V 2.2/T
R97 2.2K
R100 6.8K
D31 S2075K
X2 10.240MHZ
L53
C85 10P/CJ
C86 18P/CH
C84 10V 1000
LD077
R163 22K
C82 470P/SL
C87 0.022/YF
C88 47P /CH
TP10
L16 1100uH
R101 1K
C89 47P/CH
TR20 2SC1675L
R102 6.8K
R103 2.2K
R104 1K
C90 10V 0.47/T
C91 0.047/P 25V
C92 4.7
IC2 UHIC070
L19 LA216
C93 0.0.01/YD
L20 LA195
R105 100
C94 0.047/P
TP2
R106 100
R107 100
TP1
TP9
C57 18P/CH
L10 LA269
L57 470uH
C49 0.022/P
R56 1K
R57 470
D17 IS2075K
C50 0.0.22 /YF
D18 D19
IS2075K IS2075K
R58 3.3K
R59 220
R234 820
C51 0.022 /YF
C213 0.022/YF
C204 0.022/YF
FT3 FL067
C53 0.022/YF
C52 0.022/YF
R61 180
R60 220
R62 22
R63 220
D20 IS2075K
C54 0.022/YF
R64 1.5K
FET3 2SK19GR
IC3 AN612
C95 10v 47
R108 100
C96 0.01/YD
R110 150K
R109 3.9K
R205 1.2K
C97 0.01/YD
VR4 10K
R111 560
C98 10P/CJ
C68 15P/CH
C207 47P/CH
R1 3.3K
C1 15P/CH
R2 18K
C2 0.022/YF
R4 470
R3 330
C3 0.022/YF
R5 220
L1 LA038
C4 0.022/YF
C5 0.001/YD
R6 47K
R7 2.7K
C6 0.022/YF
R8 330
R9 680
L2 LA179
C7 0.022/TF
C8 0.001/YD
D1 IN60P
D2 IN60P
TP6
C10 16V 0.22/T
C9 82P/UJ
R10 100K
C11 0.001/YD
R13 470K
R11 10K
R12 10K
C233 330P/SL
R14 10K
R15 330
R16 10K
R17 3.3K
C236 330P /SL
TR1 2SC1675L
TR2 2SC1675L
TR3 2SC1730L
TR4 2SC945AQ
TR5 2SC945AQ
TR6 2SC945AQ
TR7 2SAA733P
TR8 2SC945AQ
TR9 2SC1675L
X1 7.3450MHz
R18 5.6K
R19 10K
C15 100P/UJ
C14 0.001/YD
R20 1K
C16 0.022/YF
C17 100P/UJ
R22 10K
C19 0.047'P
R24 1K
R21 100
R25 220
C21 0.022/P
L3 LA163
R26 1.5K
FET1 3SK45B